UNLESS OTHERWISE SPECIFIED:
1. T-HANDLE TO BE RED NYLON
2. TRAVEL: 2.0 INCHES MINIMUM

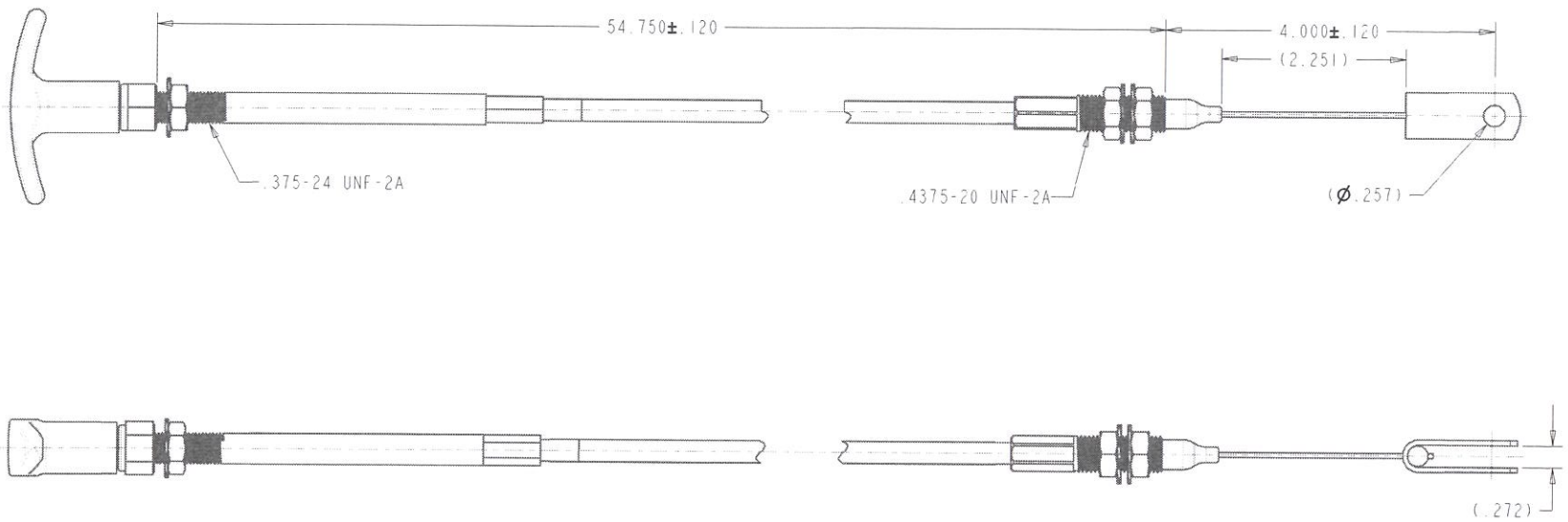

REV	CHANGE RECORD	EC No.	DRAWN	DATE
-	-	-	-	-
-	-	-	-	-
-	-	-	-	-
-	-	-	-	-
-	-	-	-	-
-	-	-	-	-
-	-	-	-	-
PR03	INCREASED BARE CABLE LENGTH	10798	T. MONROE	2022-09-08
PR02	REVISED DESIGN	10798	T. MONROE	2022-08-23
PR01	PROTOTYPE RELEASE	10798	T. MONROE	2022-07-26

UNLESS OTHERWISE SPECIFIED
DIMENSIONS HELD AFTER COATING
DIM & TOL PER ASME Y14.5-2009
CASTINGS & FORGINGS-DIMENSIONS SHOWN PLUS DRAFT PER ASME Y14.8-2009
BREAK ALL SHARP EDGES
USE IDENTICAL WELDS ON IDENTICAL ITEMS.
WELD SYMBOLS TO ANSI AWS A2.2007

[redacted]

PART CLASS	40
SUB CLASS	NA
MODEL No.	3050-950
VERSION No.	A.1
DRAWING No.	3050-950
VERSION No.	A.1

[redacted]
REFER TO PROTECTION NOTICE ISO 16016

FINISH: PER VENDOR SPECS (SEE ASV ENG-STD-001)

THIRD ANGLE PROJECTION

WEIGHT	SCALE
NA	1.000
DRG SIZE	SHEET
A2	1 OF 1

MATERIAL: PER VENDOR SPECS

ALTERNATIVE MATERIAL: PER VENDOR SPECS

DIMENSIONS IN INCHES UNLESS OTHERWISE SPECIFIED

DESCRIPTION: CABLE, LOADER RELEASE - UPPER

PART No.: 3050-950

REV: A

NOTES:
1. VENDOR: CABLECRAFT
2. VENDOR NO: 106846-2

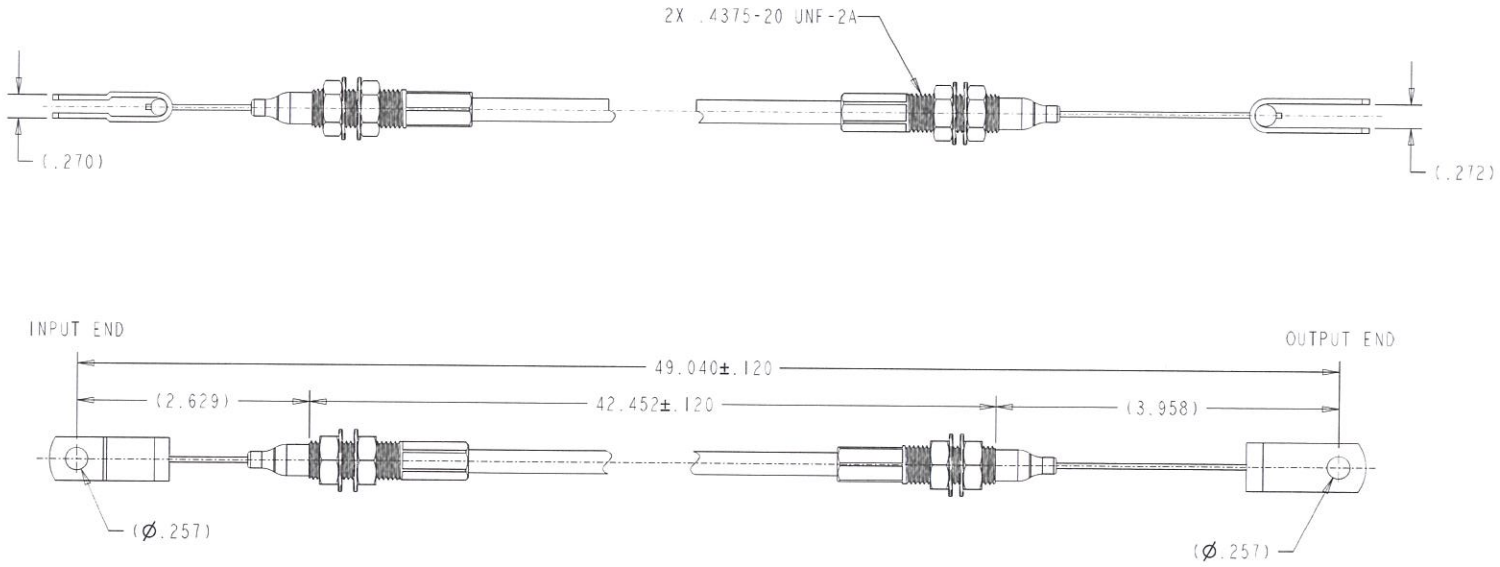

REV	CHANGE RECORD	EC No.	DRAWN	DATE
-	-	-	-	-
-	-	-	-	-
-	-	-	-	-
-	-	-	-	-
-	-	-	-	-
-	-	-	-	-
-	-	-	-	-
-	-	-	-	-
-	-	-	-	-
A	PRODUCTION RELEASE	10798	T. MONROE	2022-07-26

UNLESS OTHERWISE SPECIFIED
DIMENSIONS HELD AFTER COATING
DIM & TOL PER ASME Y14.5-2009
CASTINGS & FORGINGS-DIMENSIONS SHOWN PLUS DRAFT PER ASME Y14.6-2009
BREAK ALL SHARP EDGES
USE IDENTICAL WELDS ON INDENTICAL ITEMS.
WELD SYMBOLS TO ANSI AWS A2.2007

[redacted]

[redacted]
REFER TO PROTECTION NOTICE ISO 15016

MATERIAL: PER VENDOR SPECS

FINISH: PER VENDOR SPECS (SEE ASV ENG-STD-001)

ALTERNATIVE MATERIAL: PER VENDOR SPECS

PART CLASS:	40
SUB CLASS:	NA

THIRD ANGLE PROJECTION

DIMENSIONS IN INCHES UNLESS OTHERWISE SPECIFIED

DESCRIPTION: CABLE, LOADER RELEASE - LOWER

MODEL No.	VERSION No.	WEIGHT	SCALE
3051-174	A.4	NA	1.000
DRAWING No.	VERSION No.	DRG SIZE	SHEET
3051-174	A.5	A2	1 OF 1

PART No.: 3051-174

REV: A

NOTES:
1. VENDOR: CABLECRAFT
2. VENDOR NO: 106846-1
3. T-HANDLE TO BE RED NYLON
4. TRAVEL: 2.0 INCHES MINIMUM

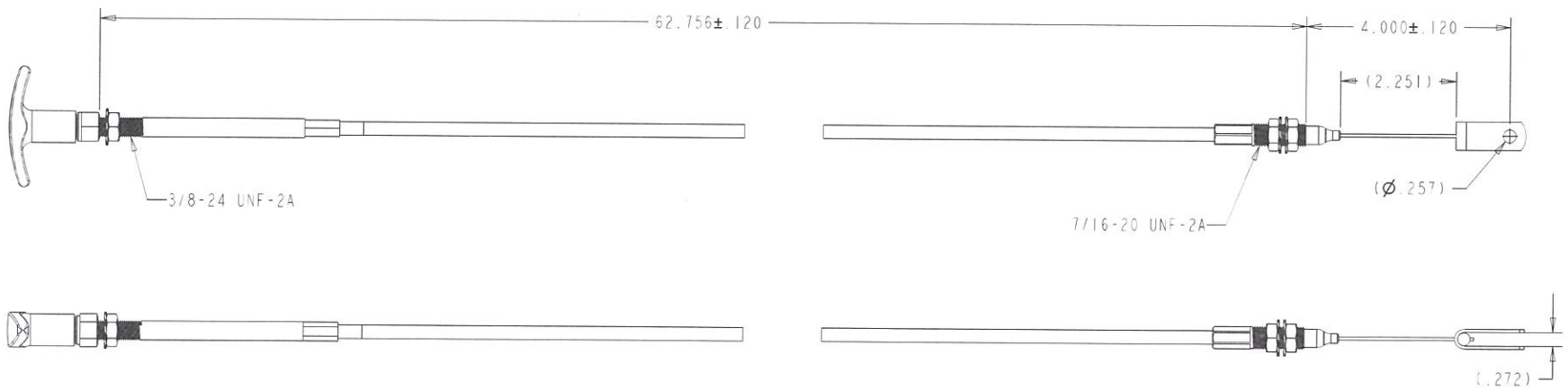

REV	CHANGE RECORD	EC No.	DRAWN	DATE
-	-	-	-	-
-	-	-	-	-
-	-	-	-	-
-	-	-	-	-
-	-	-	-	-
-	-	-	-	-
-	-	-	-	-
-	-	-	-	-
-	-	-	-	-
A	PRODUCTION RELEASE	10798	T. MONROE	2023-02-13

UNLESS OTHERWISE SPECIFIED:
DIMENSIONS HELD AFTER COATING
DIM & TOL PER ASME Y14.5-2009
CASTINGS & FORGINGS-DIMENSIONS SHOWN PLUS DRAFT PER ASME Y14.8-2009
BREAK ALL SHARP EDGES
USE IDENTICAL WELDS ON INDENTICAL ITEMS.
WELD SYMBOLS TO ANSI AWS A2.2007

[redacted]

PART CLASS:	40
SUB CLASS:	NA
MODEL No.	3051-523
VERSION No.	A.4
DRAWING No.	3051-523
VERSION No.	A.4

[redacted]
REFER TO PROTECTION NOTICE
ISO 16016

FINISH: PER VENDOR SPECS (SEE ASV ENG-STD-001)

THIRD ANGLE PROJECTION

WEIGHT	SCALE
NA	1.000
DRG SIZE	SHEET
A2	1 OF 1

MATERIAL: PER VENDOR SPECS

ALTERNATIVE MATERIAL: PER VENDOR SPECS

DIMENSIONS IN INCHES UNLESS OTHERWISE SPECIFIED

DESCRIPTION: CABLE, LOADER RELEASE

PART No. 3051-523

REV A